Measurement of the proton magnetic moment

Bastian Löher
Recitation

TECHNISCHE UNIVERSITÄT DARMSTADT

$$\mu_p$$

SFB 634

Overview

- The proton
- The magnetic moment
- Motivation
- Direct measurement of the magnetic moment
- Today's value
- Current experiments

The Proton

- 1886: Eugen Goldstein observed 'canal rays'
  - Hydrogen has highest charge/mass ratio
  - Found ions

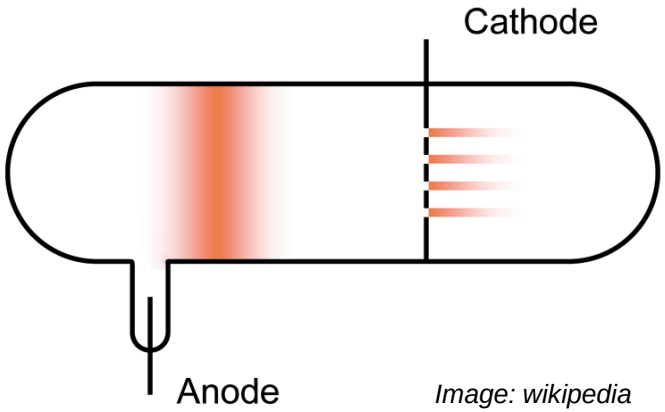

Image: wikipedia

- 1918: Rutherford shot alphas into nitrogen
  - Found hydrogen nuclei
  - Concluded that hydrogen nuclei had to be elementary particles

- Quark model: p=(u u d)

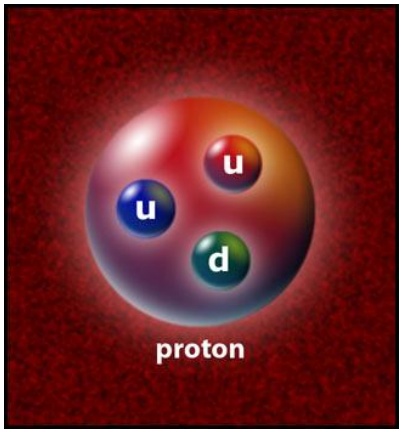

Image: www.greatblogsofhistory.com

The magnetic moment

- Actually the magnetic 'dipole' moment
  - Contribution of the internal magnetism to the outer dipole field

- General definition:

$$\mu_s = g_s \mu_B \frac{s}{\hbar}$$

- With Bohr magneton:

$$\mu_B = \frac{e\hbar}{2m_e}$$

Motivation

- 1947: Kusch and Foley measured ratios of g-factors
  - Discovered anomaly: Spin g-factor is not exactly twice the orbital g-factor
  - Further investigation through proton magnetic moment
- Other physical quantities depend on magnetic moment of the proton
  - α, e/mc, M/m

Direct Measurement

TECHNISCHE UNIVERSITÄT DARMSTADT

- Idea: Measure larmor frequency of protons and cyclotron frequency of free electrons in the same magnetic field
- Larmor: $$\omega_p = 2\mu_p \frac{H}{\hbar}$$
- Cyclotron: $$\omega_e = \frac{eH}{mc}$$
- Magnetic moment: $$\frac{\omega_p}{\omega_e} = \frac{2\mu_p H/\hbar}{eH/mc} = \frac{\mu_p}{e\hbar/2mc} = \frac{\mu_p}{\mu_B}$$

Experimental setup

- Measure electron cyclotron frequency directly
  - Waveguide delivers high frequency at 9370 MHz
  - Cathode emits electron beam
  - Current on anode is measured over frequency

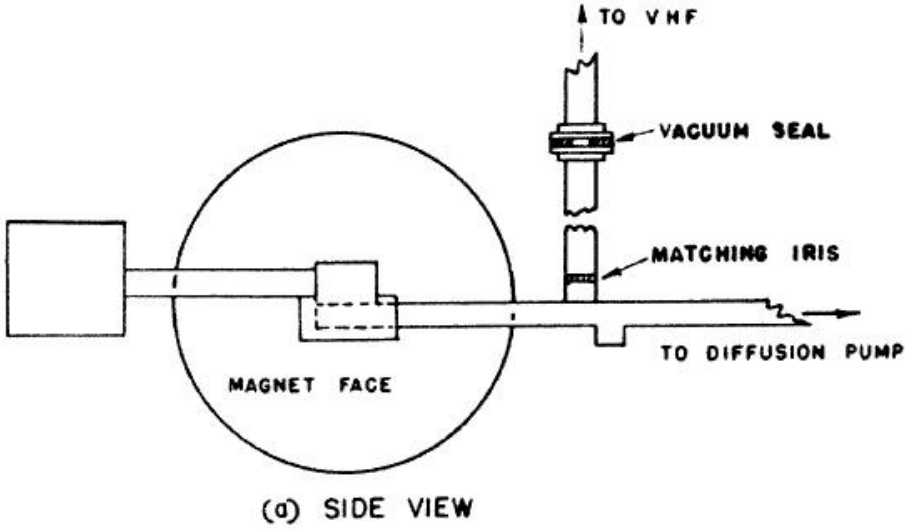

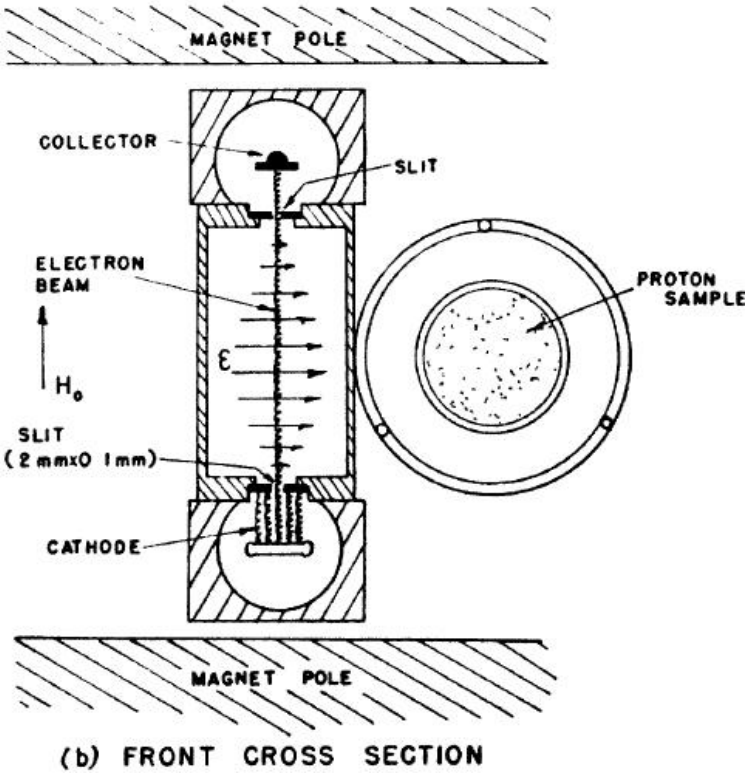

Source: J.H. Gardner, Physical Review 83, 996 (1951)

Experimental setup II

- Measure proton larmor frequency via resonance absorption
  - Proton sample is mineral oil in magnetic field
  - Excite protons to precession by variable high frequency
  - Observe resonance from spin flips

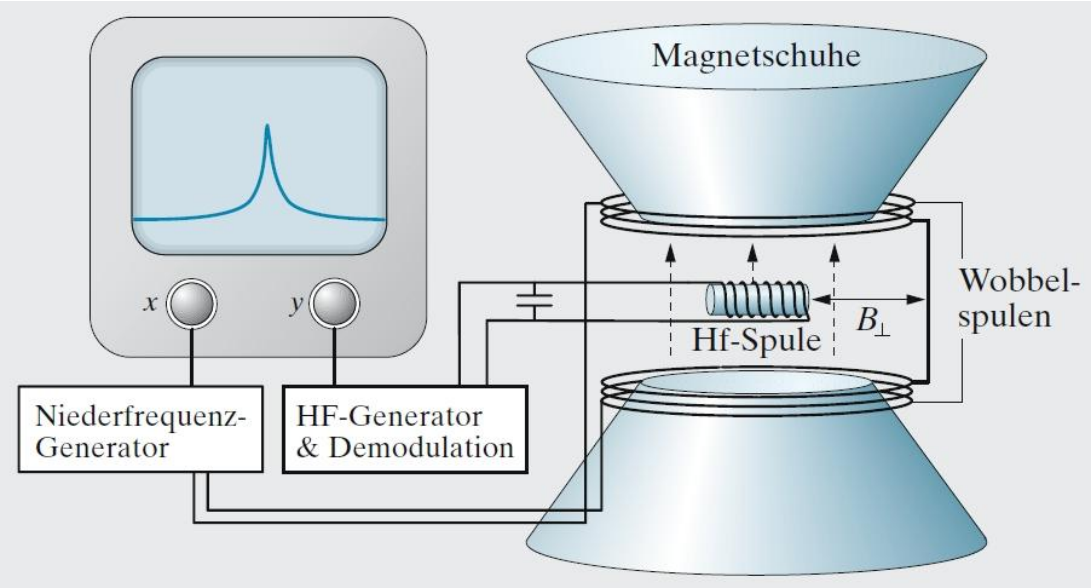

Source: Gerthsen, from E. Purcell, F. Bloch and R. Pound, 1946

Results

- Frequency comparison
  - Observe 657th harmonic of proton resonance of 14.24 MHz
  - Vary ν' to match resonance lines

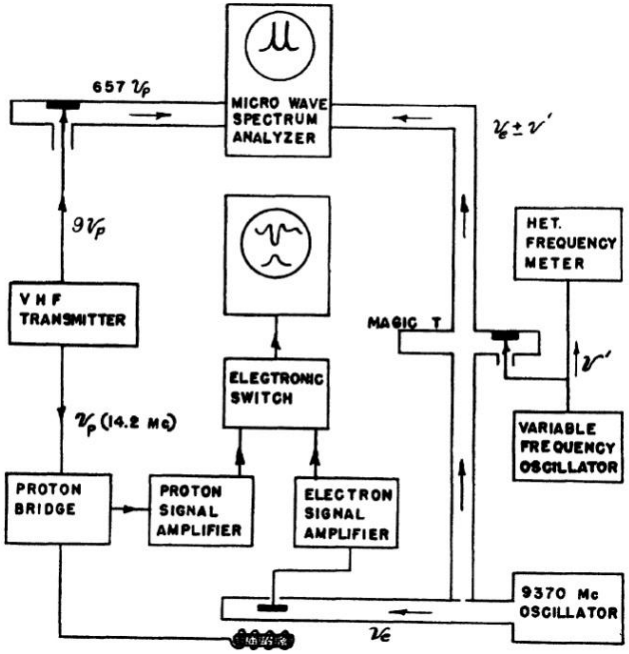

Source: J.H. Gardner, Physical Review 83, 996 (1951)

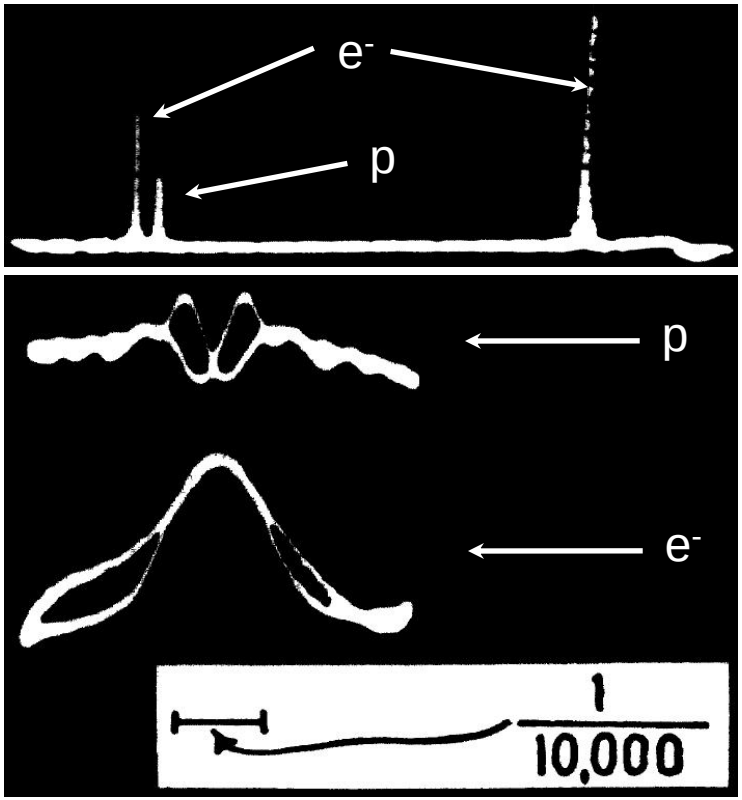

Results II

- Frequency ratio:

$$\frac{\omega_e}{\omega_p} = 657.475 \pm 0.008$$

- Diamagnetic correction to the field of the proton gives:

$$\mu_p = (1.52101 \pm 0.00002) \times 10^{-3} \mu_B$$

$$\mu_p = (2.79 \pm 0.04) \mu_N$$

Current experiments

- Single proton stored in penning trap
  - Measurement of cyclotron and larmor frequency on the same particle
  - First direct measurement of proton g-factor
  - Non-destructive

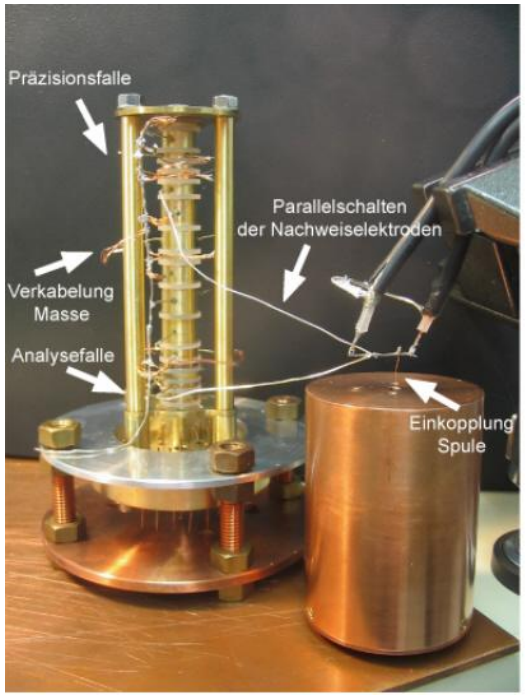

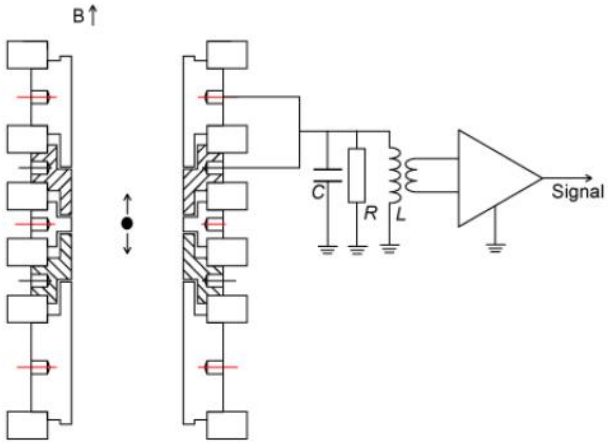

- More information:
  - Group of K. Blaum at MPI-K in Heidelberg

Source: http://www.mpi-hd.mpg.de/blaum

CODATA value

$$\mu_p = 2.792847351\ (28)\mu_N$$

- References:
  - *J.H. Gardner, Physical Review 83, 996 (1951)*
  - P. Kusch and H. M. Foley, Phys. Rev. 74, 250 (1948)
  - Bloembergen, Purcell, and Pound, Phys. Rev. 73, 679 (1948)
  - Gerthsen, Wikipedia